Diameter ø50mm Shaft type Incremental Rotary Encoder

■ Features

- Light plastic body
- Suitable for measuring angle, position, revolution, speed, acceleration and sensing distance
- Power supply : 5VDC, 12-24VDC ±5%
- Cost-effective

■ Applications

- Various tooling machinery, packing machine and general industrial machinery etc.

⚠ **Please read "Caution for your safety" in operation manual before using.**

■ Ordering information

E50S	8	P	–	600	–	3	–	N	–	24	–	

Series	Shaft diameter	External material	Pulse/1Revolution	Output phase	Output	Power supply	Cable
Diameter ø50mm, shaft type	6 : ø6mm 8 : ø8mm	Plastic	Refer to resolution	2: A, B 3: A, B, Z 4: A, $\overline{A}$, B, $\overline{B}$ 6: A, $\overline{A}$, B, $\overline{B}$, Z, $\overline{Z}$	T: Totem pole output N: NPN open collector output V: Voltage output L: Line driver output(※)	5 : 5VDC ±5% 24: 12-24VDC ±5%	No mark: Cable type C: Connector cable type(※)

※Standard : E50S8P-PULSE-3-N-24

※The power of Line driver is only for 5VDC

※Cable length : 250mm

■ Specifications

Item			Diameter ø50mm shaft type of incremental rotary encoder	
Resolution(P/R)※1			*1, *2 ,*5, 10, 12, 15, 20, 23, 25, 30, 35, 40, 45, 50, 60, 75, 100, 120, 125, 150, 192, 200, 240, 250, 256, 300, 360, 400, 500, 512, 600	
Electrical specification	Output phase		A, B, Z phase(Line driver : A, $\overline{A}$, B, $\overline{B}$, Z, $\overline{Z}$ phase)	
	Phase difference of output		Phase difference between A and B : $\frac{T}{4} \pm \frac{T}{8}$ (T=1cycle of A phase)	
	Control output	Totem pole output	• Low - Load current : Max. 30mA, Residual voltage : Max. 0.4VDC • High - Load current : Max. 10mA, Output voltage(Power voltage 5VDC):Min. (Power voltage-2.0)VDC, Output voltage(Power voltage 12-24VDC):Min. (Power voltage-3.0)VDC	
		NPN open collector output	Load current : Max. 30mA, Residual voltage : Max. 0.4VDC	
		Voltage output	Load current : Max. 10mA, Residual voltage : Max. 0.4VDC	
		Line driver output	• Low - Load current : Max. 20mA, Residual voltage : Max. 0.5VDC • High - Load current : Max. -20mA, Output voltage : Min. 2.5VDC	
	Response time (Rise/Fall)	Totem pole output	Max. 1μs	• Measuring condition - Cable length : 2m, I sink = 20mA
		NPN open collector output		
		Voltage output		
		Line driver output	Max. 0.5μs	
	Max. Response frequency		180kHz	
	Power supply		• 5VDC ±5%(Ripple P-P : Max. 5%) • 12-24VDC ±5%(Ripple P-P : Max. 5%)	
	Current consumption		Max. 80mA(disconnection of the load), Line driver output : Max. 50mA(disconnection of the load)	
	Insulation resistance		Min. 100MΩ(at 500VDC megger between all terminals and case)	
	Dielectric strength		750VAC 50/60Hz for 1 minute(Between all terminals and case)	
	Connection		Cable type, 250mm connector cable type, Connector type(Axial, Radial)	
Mechanical specification	Starting torque		Max. 100gf·cm(0.01N·m)	
	Moment of inertia		Max. 40g·cm²(4×10^{-6} kg·m²)	
	Shaft loading		Radial : 2kgf, Thrust : 1kgf	
	Max. allowable revolution※2		5000rpm	
Vibration			1.5mm amplitude or 300m/s^2 at frequency of 10 to 55Hz(for 1 min.) in each of X, Y, Z directions for 2 hours	
Shock			Approx. Max. 75G	
Environment	Ambient temperature		-10 to 70℃, storage : -25 to 85℃	
	Ambient humidity		35 to 85%RH, storage : 35 to 90%RH	
Protection			IP50(IEC standard)	
Cable			ø5, 5-wire, Length : 2m, Shield cable(Line driver output : ø5, 8-wire) (AWG 24, Core diameter : 0.08mm, Number of cores : 40, Insulator out diameter : ø1)	
Accessory			ø8(ø6)mm coupling, Bracket	
Unit weight			Approx. 235g	

※1: '*' pulse is only for A, B phase(Line Driver output is for A, $\overline{A}$, B, $\overline{B}$ phase)
※2: Make sure that. Max response revolution should be lower than or equal to max. allowable revolution when selecting the resolution.

$$[\text{Max. response revolution(rpm)} = \frac{\text{Max. response frequency}}{\text{Resolution}} \times 60 \text{ sec}]$$

※Environment resistance is rated at no freezing or condensation.

■ Control output diagram

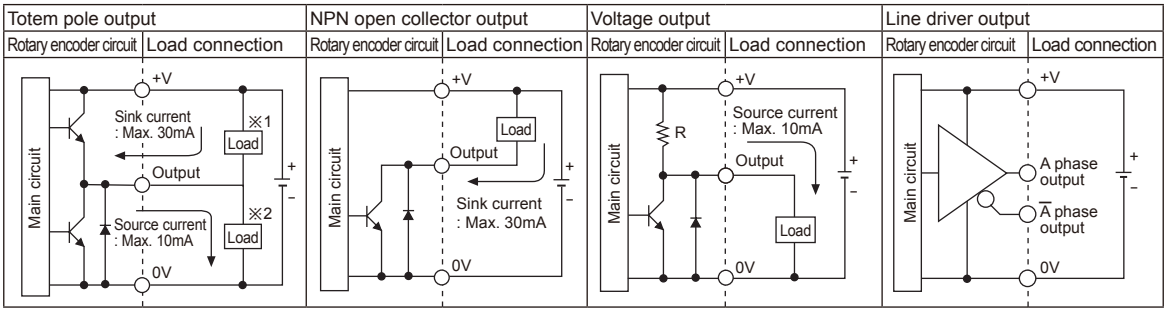

- Totem pole output type can be used for NPN open collector output type(※1) or Voltage output type(※2).
- The output circuit of A, B, Z phase are the same. (Line driver output is A, Ā, B, B̄, Z, Z̄)

■ Output waveform

- **Totem pole output / NPN open collector output / Voltage output**

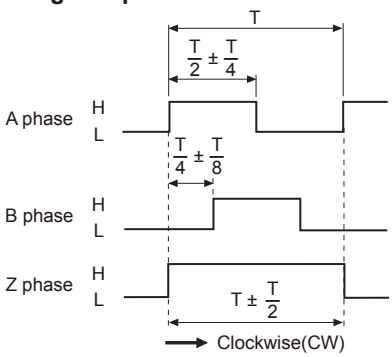

※CW : Right turn as from the shaft

- **Line driver output**

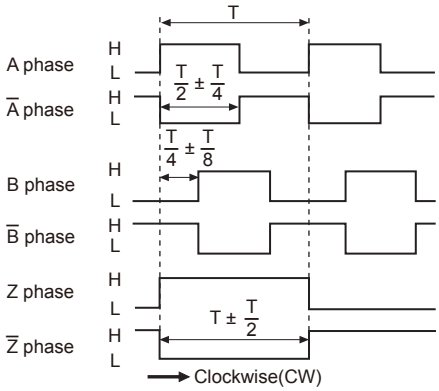

■ Connections

◎ Cable type

- **Totem pole output / NPN open collector output / Voltage output**

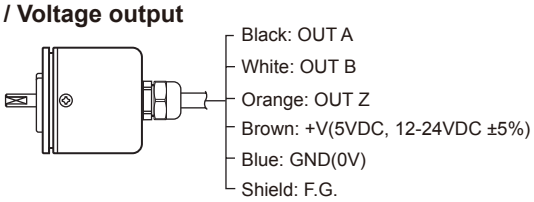

- **Line driver output**

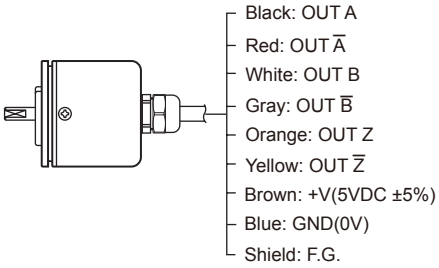

※Unused wires must be insulated.
※The shield cable and metal case of encoder must be grounded(F.G.).

◎ Connector cable type

- **Totem pole output / NPN open collector output / Voltage output**
- **Line driver output**

Totem pole output NPN open collector output Voltage output			Line driver output		
Pin No	Function	Cable color	Pin No	Function	Cable color
①	OUT A	Black	①	OUT A	Black
②	OUT B	White	②	OUT Ā	Red
③	OUT Z	Orange	③	+V	Brown
④	+V	Brown	④	GND	Blue
⑤	GND	Blue	⑤	OUT B	White
⑥	F.G.	Shield	⑥	OUT B̄	Gray
—			⑦	OUT Z	Orange
			⑧	OUT Z̄	Yellow
			⑨	F.G.	Shield

※F.G.(Field Ground) : It must be grounded separately.

■ Dimensions

◎ Cable type

(unit: mm)

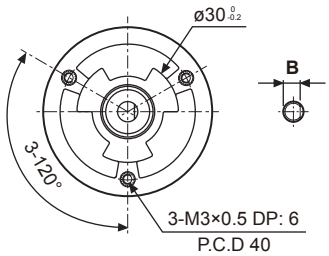

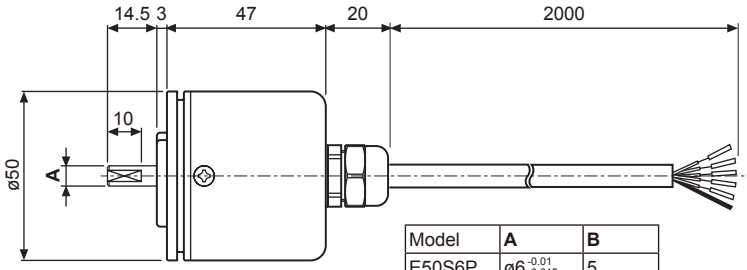

Model	A	B
E50S6P	ø6 -0.01 -0.015	5
E50S8P	ø8 -0.01 -0.02	7

● **Connect the bracket**

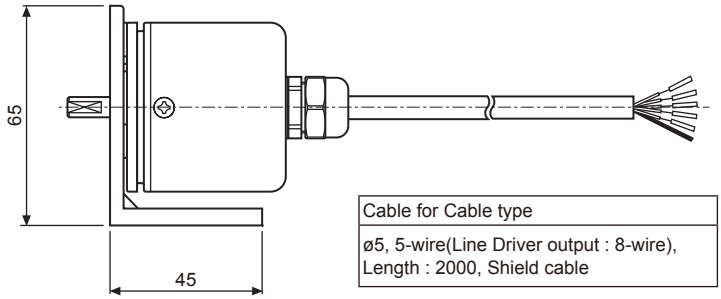

Cable for Cable type
ø5, 5-wire(Line Driver output : 8-wire), Length : 2000, Shield cable

◎ Connector cable type

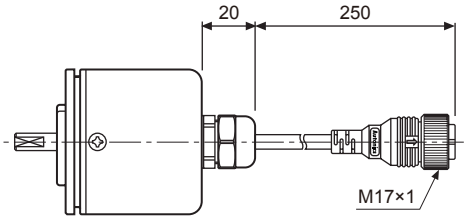

Cable for Connector cable type
ø5, 5-wire(Line Driver output : 8-wire), Length : 250mm, Shield cable

※Connector cable is sold separately and refer to the G-10 for specifications.

● **Bracket**

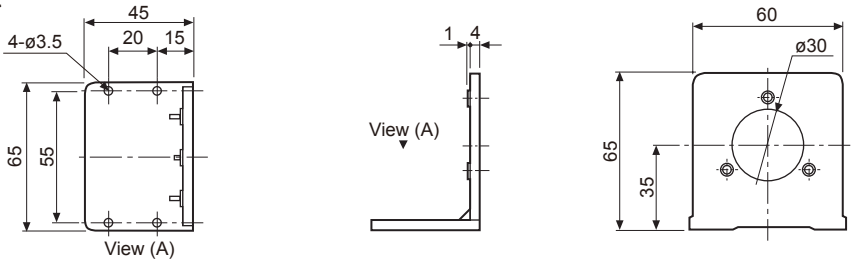

● **Coupling(E50SP)**

• ø6 Coupling

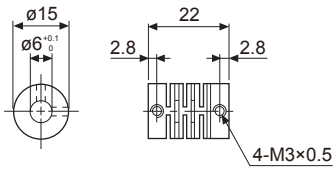

• ø8 Coupling

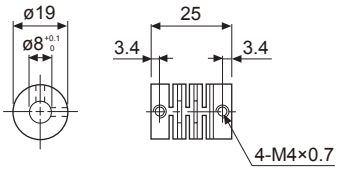

- Parallel misalignment: Max. 0.25mm
- Angular misalignment: Max. 5°
- End-play: Max. 0.2mm

※For parallel misalignment, angular misalignment, end-play terms, refer to the F-78 page.

※For flexible coupling(ERB Series) information, refer to the F-71 page.